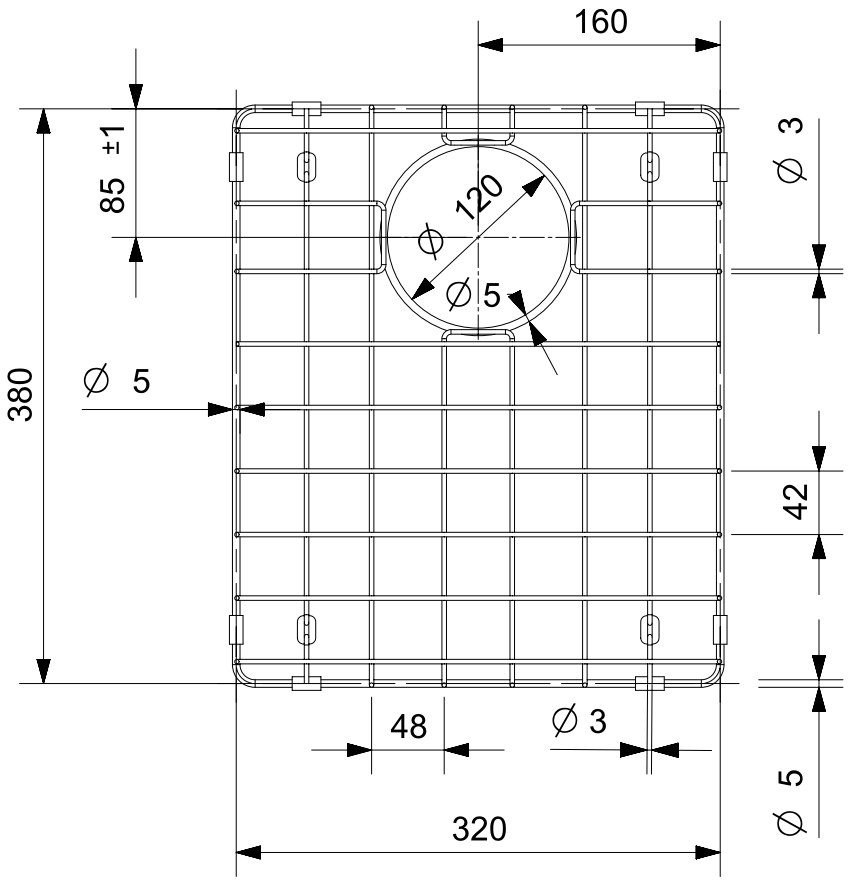

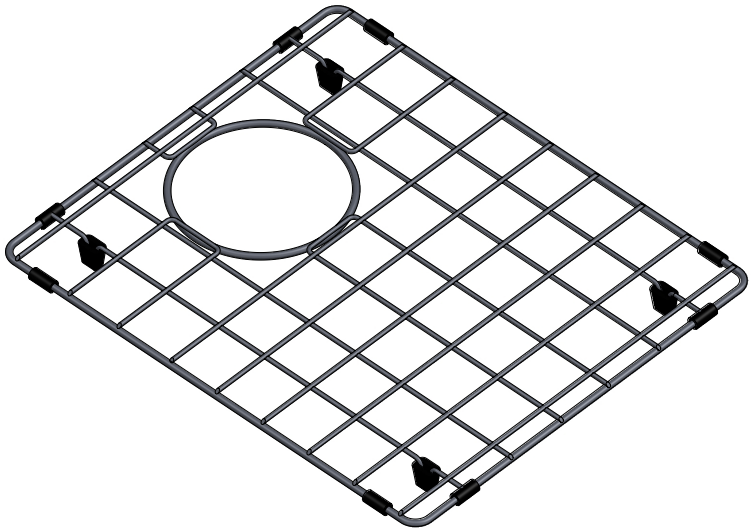

Bodemrek 34x40 Comf. Gun Metal II

R39632

Date: 24-05-2024